PEM3012 and PEM3112 Auxiliary Power Supply using remote shut down

Application Note : AN-1105
First created on July-12-2011

This application note explains how to provide an optional Auxiliary power supply to the target device. As an example, this optional and additional circuit provides for a target device using the PEM3012 or PEM3112 module to be powered by 12V DC power supply such as a wall adapter.

Please refer to the circuit as shown in Fig 1 below.

Under default conditions, the target device draws power from the PEM module via the Schottky diode D1. (D1 to be chosen so as to have a forward voltage drop of maximum +0.5V). Resistor R1 is used to increase the output voltage at pin +VDC so that the voltage drop due to D1 gets compensated and provides desired +12V output to target device.

Whenever auxiliary supply is in an on-state and delivering 12V~13V DC, it biases the opto-coupler U1 through resistors R4 and R5 which pulls the RSD pin HIGH (through R2, R3 and C4). The RSD in HIGH state shuts down the output of the PEM module internally. The auxiliary supplies power to the target device via D2. The PEM module will continue to stay in an internally off state as long as RSD pin is HIGH.

The RSD will go to LOW state only when the auxiliary supply is removed or its voltage drops to zero. At this state the PEM module will resume supplying power to the target board via POE and via D1.

Capacitor C3 is required in order to reduce the change over time between the auxiliary supply and the POE supply. C3 should be placed as close as possible to the output. For an increased buffer and to provide for a longer change-over time, the capacitance of C3 can be increased. Capacitor C1 and C2 are used for loop stability and output ripple reduction.

Note: Since the RSD (remote shut down) pin is on the input side, use of an opto-isolator is required in order to maintain 1500V isolation with the auxiliary supply which is connected on the output side.

It is recommended that D1 and D2 are same and these can be of any type having Maximum forward voltage drop of 0.5V. Example: 1N5820.

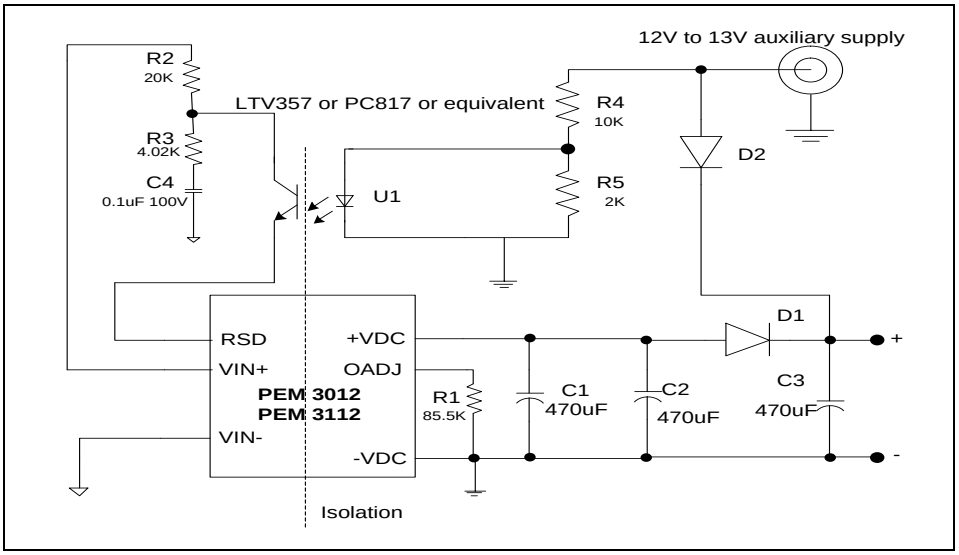

Figure 1: Auxiliary power supply having priority Over POE PEM3012/3112